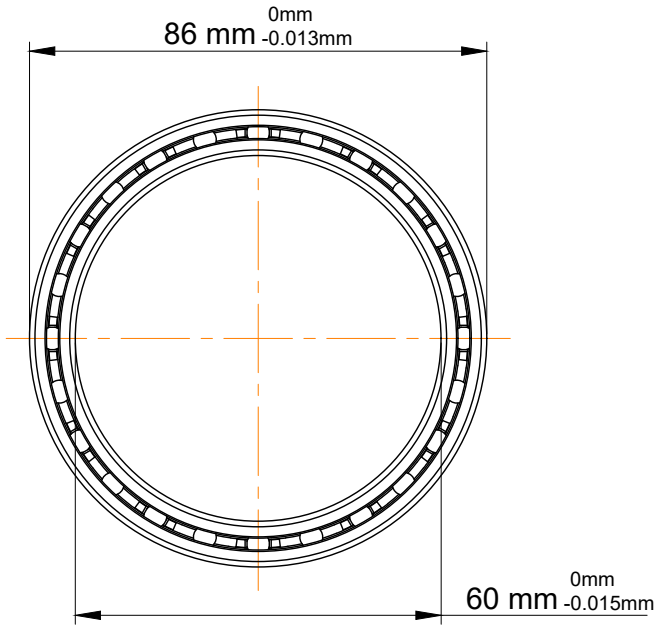

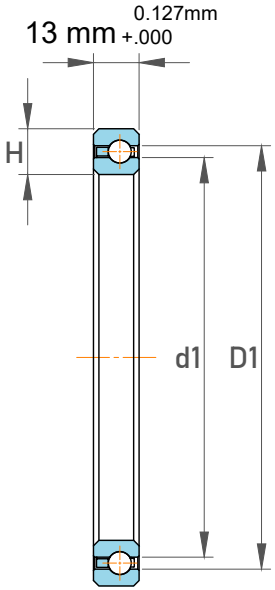

Seal Type	Open
For Load Direction	Radial
Contact Angle	
Dynamic Radial Load	1708 lbf
Static Radial Load	2423 lbf
Weight	0.21 Kg

TFL BEARING
SERVICE INVENTORY SOLUTIONS

TFL Bearings Manufacturing Co., Ltd.

Building 2, Lushang Phoenix Plaza, 521 Jingde Road, Licheng District, Jinan City, Shandong Province, China
https://sdtflbearing.com
info@tflbearing.com
0086 15806631151

This file and any associated information and specifications are provided for reference and evaluation purposes only, and is subject to change without notice. TFL makes no representations, warranties or guarantees as to the appropriateness, accuracy, completeness, or suitability for any purpose, of the file, information or specifications. You are solely responsible for the use of the file, information or specifications.

Part Number	K06013CP0，Constant Section (CS) Bearings
Size	60 mm x 86 mm x 13 mm
Brand	TFL