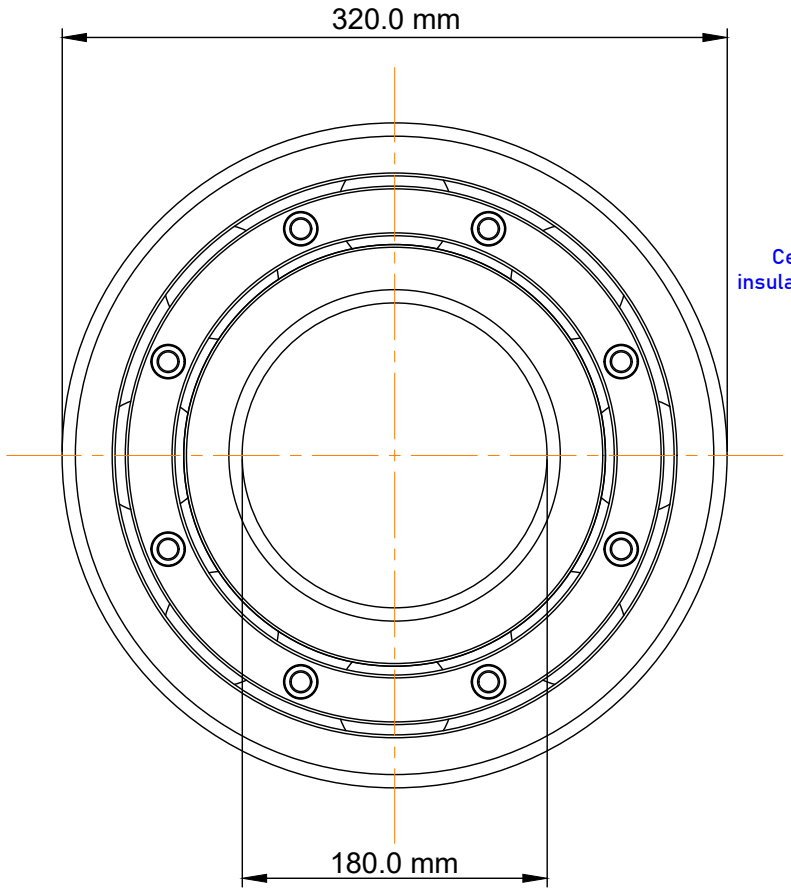

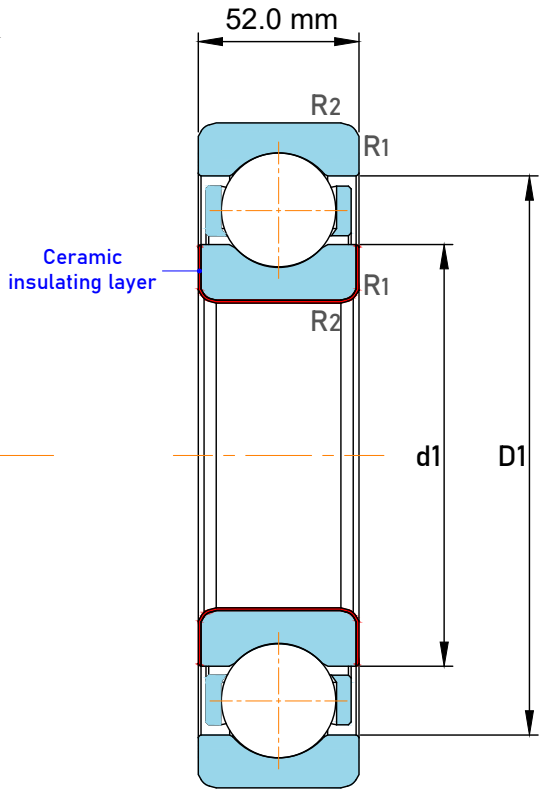

Net Weight	18.6 kg
Basic Dynamic Load Rating	240.0 kN
Basic Static Load Rating	244.0 kN
Reference Speed	3650 r/min
Breakdown Voltage (DC)	≤3000 V
Layer Thickness	200 μm
Electrical Resistance	50MΩ (Dry); 10MΩ (Damp)
Cage Material	Brass cage

TFL BEARING
SERVICE INVENTORY SOLUTIONS

TFL Bearings Manufacturing Co., Ltd.

Jinan City, Shandong Province, China
https://www.sdtflbearings.com
info@sdtflbearing.com
+86 15806631151

This file and any associated information and specifications are provided for reference and evaluation purposes only, and is subject to change without notice. TFL makes no representations, warranties or guarantees as to the appropriateness, accuracy, completeness, or suitability for any purpose, of the file, information or specifications. You are solely responsible for the use of the file, information or specifications.

Part Number	**6236-M-J20C-C3, Deep Groove Ball Bearings**
Size	**180.0 mm x 320.0 mm x 52.0 mm**
Brand	FAG