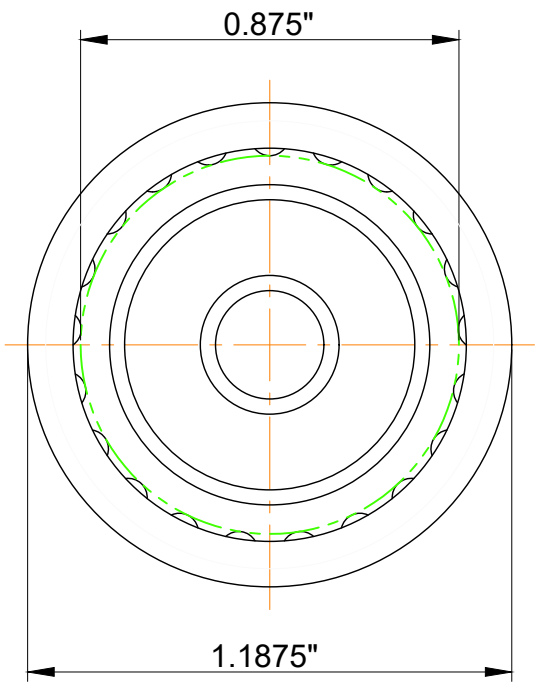

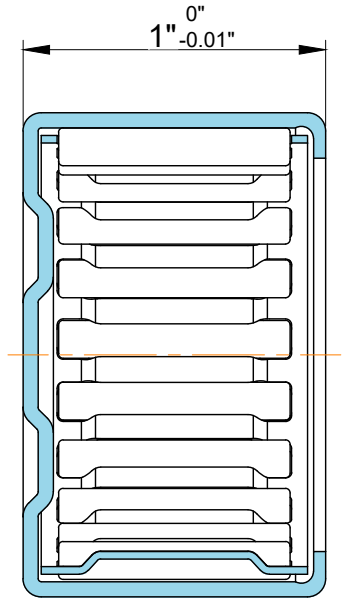

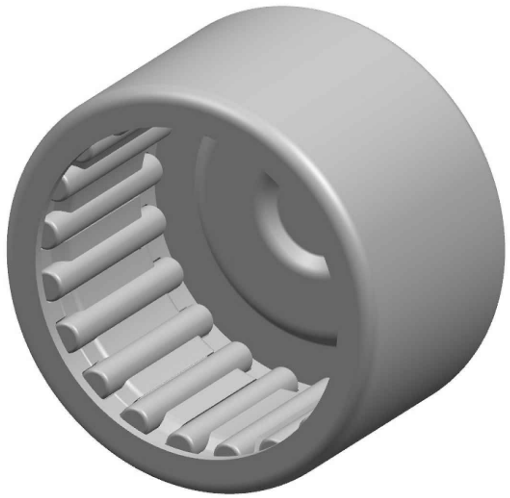

Dynamic Radial Load	5733 lbf
Static Radial Load	8655 lbf
Max Speed	11100 rpm
Weight	43 g

TFL BEARING
SERVICE INVENTORY SOLUTIONS

TFL Bearings Manufacturing Co., Ltd.

Jinan City, Shandong Province, China
https://sdtflbearings.com
info@tflbearing.com
+86 15806631151

This file and any associated information and specifications are provided for reference and evaluation purposes only, and is subject to change without notice. TFL makes no representations, warranties or guarantees as to the appropriateness, accuracy, completeness, or suitability for any purpose, of the file, information or specifications. You are solely responsible for the use of the file, information or specifications.

Part Number	**BCH1416，Drawn Cup Needle Roller Bearings**
Size	**0.875" x 1.1875" x 1"**
Brand	TFL